www.reelschematic.com

Daiwa
COMMITTED TO TOTAL QUALITY

SPINNING REEL GS1055/1355

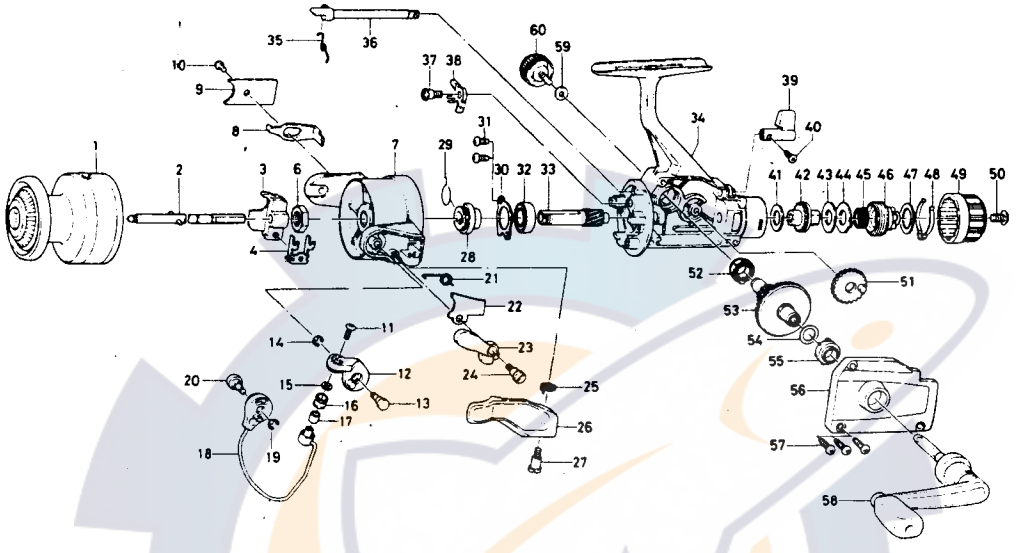

Key No.	Parts No.	Parts Name	Price Each
1	E00-3001	Spool assembly	7.50
2	B83-4501	Main shaft	1.65
3	B97-9601	Oscillating slider	0.75
4	B97-9701	Oscillating slider retainer	0.50
6	B67-9401	Rotor nut	0.45
7	B81-8302	Rotor	11.20
8	B83-4301	Bail trip lever	0.65
9	B74-7303	Bail trip cover	0.35
10	B83-4402	Bail trip cover screw	0.35
11	B67-9302	Line roller screw	0.35
12	B67-4601	Bail arm	1.20
13	B83-3801	Bail arm screw	0.45
14	320-5901	Bail arm screw retainer	0.40
15	B55-4301	Line roller washer	0.35
16	250-3921	Line roller	0.80
17	B45-1501	Line roller bushing	0.40
18	B83-4001	Bail	3.40
19	320-5901	Bail trip cam screw retainer	0.40
20	B83-4201	Bail trip cam screw	0.45
21	B83-3701	Bail spring	0.35
22	B83-3901	Bail spring cover	0.35
23	B67-4901	Trigger plate	1.20
24	B68-8801	Bail spring cover screw	0.80
25	B67-5201	Trigger spring	0.40
26	B67-5105	Trigger lever	2.10
27	B68-8802	Trigger screw	0.75
28	B83-5601	Anti-reverse ratchet	1.30
29	145-0501	Anti-reverse pawl spring	0.50
30	B45-6401	Bearing retainer	0.35
31	B83-4402	Bearing retainer screw	0.35
32	637-5701	Ball bearing	7.50
33	B83-3501	Pinion gear	3.30
34	E00-1401	Body	13.75

Key No.	Parts No.	Parts Name	Price Each
35	B44-8501	Anti-reverse cam spring	0.40
36	B44-8401	Anti-reverse cam	0.70
37	B61-8101	Anti-reverse pawl screw	0.95
38	B90-3001	Anti-reverse pawl	0.40
39	B83-3401	Anti-reverse lever	1.30
40	B12-8201	Anti reverse lever screw	0.50
41	B48-9901	Drag washer A	0.40
42	B83-3602	Click gear	0.80
43	B76-0501	Drag washer B	0.40
44	B49-0102	Eared washer	0.35
45	B92-6702	Drag coil spring	0.40
46	B74-7603	Drag screw	0.90
47	B90-8201	Drag washer C	0.40
48	B74-7702	Drag washer spring	0.40
49	B82-5505	Drag knob	1.35
50	352-1105	Drag knob spring screw	0.70
51	B74-2501	Oscillating gear	0.70
52	B84-3901	Bushing	0.40
53	B83-4701	Drive gear	1.50
54	373-7800	Drive gear washer	0.35
55	B84-3901	Bushing	0.40
56	E00-1501	Side cover	5.00
57	B83-5002	Side cover screw	0.40
58	E00-1601	Handle	5.85
59	B92-4901	Handle lock washer	0.40
60	E00-1801	Handle lock screw	0.50

GS1355 Special Parts

1	E00-3101	Spool	7.50
7	B81-8502	Rotor	7.50
8	B83-5701	Bail trip lever	0.65
18	B83-7601	Bail	3.40
34	E00-1402	Body	12.85
56	E00-1502	Side cover	6.00